EED 101 INTRODUCTION TO ELECTRICAL ENGINEERING

SPRING 2017 **INSTRUCTOR: DR G NAVEEN BABU**

PROBLEM SET 8

REFERENCE TEXT BOOK: INTRODUCTORY CIRCUIT ANALYSIS, ROBERT BOYLESTAD, ***12TH EDITION***

Chapter 19: 3,4,5,7,12,13,14,15

Chapter 20: 3,8,9,10,11,12

CHAPTER 19 – SOLUTIONS

3. a.

$$P_T = 0 + 100\text{ W} + 300\text{ W} = \mathbf{400\ W}$$

$$Q_T = 200\text{ VAR}(L) - 600\text{ VAR}(C) + 0 = \mathbf{-400\ VAR(}\boldsymbol{C}\mathbf{)}$$

$$S_T = \sqrt{P_T^2 + Q_T^2} = \mathbf{565.69\ VA}$$

$$F_p = \frac{P_T}{S_T} = \frac{400\text{ W}}{565.69\text{ VA}} = \mathbf{0.707\ (leading)}$$

b. –

c.

$$P_T = EI_s \cos\theta_T$$

$$400\text{ W} = (100\text{ V})I_s(0.7071)$$

$$I_s = \frac{400\text{ W}}{70.71\text{ V}} = 5.66\text{ A}$$

$$\mathbf{I}_s = 5.66\text{ A}\angle 135^\circ$$

4. a. $P_T = 600\text{ W} + 500\text{ W} + 100\text{ W} = \mathbf{1200\ W}$

$Q_T = 1200\text{ VAR}(L) + 600\text{ VAR}(L) - 1800(C) = \mathbf{0\ VAR}$

$S_T = P_T = \mathbf{1200\ VA}$

b. $$F_p = \frac{P_T}{S_T} = \frac{1200\text{ W}}{1200\text{ VA}} = 1$$

c. –

d. $$I_s = \frac{S_T}{E} = \frac{1200\text{ VA}}{200\text{ V}} = 6\text{ A}, 1 \Rightarrow 0°$$

$\mathbf{I_s = 6\ A\ \angle 0°}$

5. a. $P_T = 200\text{ W} + 100\text{ W} + 0 + 50\text{ W} = \mathbf{350\ W}$

$Q_T = 50\text{ VAR}(L) + 100\text{ VAR}(L) - 200\text{ VAR}(C) - 400\text{ VAR}(C) = \mathbf{-450\ VAR(}\boldsymbol{C}\mathbf{)}$

$S_T = \sqrt{P_T^2 + Q_T^2} = \mathbf{570.09\ VA}$

b. $$F_p = \frac{P_T}{S_T} = \frac{350\text{ W}}{570.09\text{ VA}} = \mathbf{0.614\ (leading)}$$

c. –

d. $P_T = EI_s \cos\theta_T$

$350\text{ W} = (50\text{ V})I_s(0.614)$

$$I_s = \frac{350\text{ W}}{30.7\text{ V}} = 11.4\text{ A}$$

$\mathbf{I_s = 11.4\ A\ \angle 52.12°}$

7. a. R: $$P = \frac{E^2}{R} = \frac{(20\text{ V})^2}{2\,\Omega} = \mathbf{200\ W}$$

$P_{L,C} = \mathbf{0\ W}$

b. R: $Q = \mathbf{0\ VAR}$

C: $$Q_C = \frac{E^2}{X_C} = \frac{(20\text{ V})^2}{5\,\Omega} = \mathbf{80\ VAR(}\boldsymbol{C}\mathbf{)}$$

L: $$Q_L = \frac{E^2}{X_L} = \frac{(20\text{ V})^2}{4\,\Omega} = \mathbf{100\ VAR(}\boldsymbol{L}\mathbf{)}$$

c. R: $S = \mathbf{200\ VA}$
C: $S = \mathbf{80\ VA}$
L: $S = \mathbf{100\ VA}$

d. $P_T = 200\text{ W} + 0 + 0 = \mathbf{200\ W}$
$Q_T = 0 + 80\text{ VAR}(C) + 100\text{ VAR}(L) = \mathbf{20\ VAR(}\boldsymbol{L}\mathbf{)}$
$S_T = \sqrt{(200\text{ W})^2 + (20\text{ VAR})^2} = \mathbf{200\ VA}$
$F_p = \dfrac{P_T}{S_T} = \dfrac{200\text{ W}}{200.998\text{ VA}} = \mathbf{0.995\ (lagging)} \Rightarrow 5.73°$

e. –

f. $I_s = \dfrac{S_T}{E} = \dfrac{200.998\text{ VA}}{20\text{ V}} = 10.05\text{ A}$
$\mathbf{I}_s = \mathbf{10.05\ A\angle{-5.73°}}$

12. a. $P_T = 0 + 300\text{ W} = \mathbf{300\ W}$
$Q_T = 600\text{ VAR}(C) + 200(L) = \mathbf{400\ VAR(}\boldsymbol{C}\mathbf{)}$
$S_T = \sqrt{P_T^2 + Q_T^2} = \mathbf{500\ VA}$
$F_p = \dfrac{P_T}{S_T} = \dfrac{300\text{ W}}{500\text{ VA}} = \mathbf{0.6\ (leading)}$

b. $I_s = \dfrac{S_T}{E} = \dfrac{500\text{ VA}}{30\text{ V}} = 16.67\text{ A}$
$F_p = 0.6 \Rightarrow 53.13°$
$\mathbf{I}_s = \mathbf{16.67\ A\angle 53.13°}$

c. –

d. Load: 600 VAR(C), 0 W

$$R = 0,\ L = 0,\ Q_C = I^2X_C \Rightarrow X_C = \frac{Q_C}{I^2} = \frac{600\ \text{VAR}}{(16.67\ \text{A})^2} = \mathbf{2.159\ \Omega}$$

Load: 200 VAR(L), 300 W

$$C = 0,\ R = P/I^2 = 300\ \text{W}/(16.67\ \text{A})^2 = \mathbf{1.079\ \Omega}$$

$$X_L = \frac{Q_L}{I^2} = \frac{200\ \text{VAR}}{(16.67\ \text{A})^2} = \mathbf{0.7197\ \Omega}$$

$$\mathbf{Z}_T = !j2.159\ \Omega + 1.0796\ \Omega + j0.7197\ \Omega$$
$$= \mathbf{1.08\ \Omega - j1.44\ \Omega}$$

13. a. $P_T = 0 + 300\ \text{W} + 600\ \text{W} = \mathbf{900\ W}$

$Q_T = 500\ \text{VAR}(C) + 0 + 500\ \text{VAR}(L) = \mathbf{0\ VAR}$

$S_T = P_T = \mathbf{900\ VA}$

$$F_p = \frac{P_T}{S_T} = \mathbf{1}$$

b. $I_s = \dfrac{S_T}{E} = \dfrac{900\ \text{VA}}{100\ \text{V}} = 9\ \text{A},\ \mathbf{I}_s = \mathbf{9\ A\ \angle 0°}$

c. –

d.

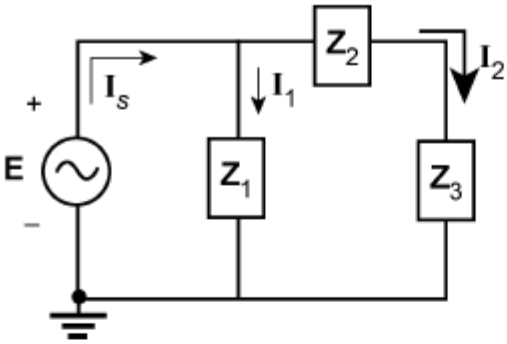

$\mathbf{Z}_1$: $Q_C = \dfrac{V^2}{X_C} \Rightarrow X_C = \dfrac{V^2}{Q_C} = \dfrac{10^4}{500} = \mathbf{20\ \Omega}$

$\mathbf{I}_1 = \dfrac{\mathbf{E}}{\mathbf{Z}_1} = \dfrac{100\text{ V}\angle 0°}{20\ \Omega\angle -90°} = 5\text{A}\angle 90°$

$\mathbf{I}_2 = \mathbf{I}_s - \mathbf{I}_1 = 9\text{ A} - j5\text{ A} = 10.296\text{ A}\angle -29.05°$

$\mathbf{Z}_2$: $R = \dfrac{P}{I^2} = \dfrac{300\text{ W}}{(10.296\text{ A})^2} = \dfrac{300}{106} = \mathbf{2.83\ \Omega}$

$X_{L,C} = \mathbf{0\ \Omega}$

$\mathbf{Z}_3$: $R = \dfrac{P}{I_2^2} = \dfrac{600\text{ W}}{(10.296\text{ A})^2} = \mathbf{5.66\ \Omega}$

$X_L = \dfrac{Q}{I_2^2} = \dfrac{500}{(10.296\text{ A})^2} = \mathbf{4.72\ \Omega}, X_C = \mathbf{0\ \Omega}$

14. a. $P_T = 200\text{ W} + 30\text{ W} + 0 = \mathbf{230\ W}$

$Q_T = 0 + 40\text{ VAR}(L) + 100\text{ VAR}(L) = \mathbf{140\ VAR(}\boldsymbol{L}\mathbf{)}$

$S_T = \sqrt{P_T^2 + Q_T^2} = \mathbf{269.26\ VA}$

$F_p = \dfrac{P_T}{S_T} = \dfrac{230\text{ W}}{269.26\text{ VA}} = \mathbf{0.854\ (lagging)} \Rightarrow 31.35°$

b. $I_s = \dfrac{S_T}{E} = \dfrac{269.26\text{ VA}}{100\text{ V}} = 2.6926\text{ A}$

$\mathbf{I}_s = \mathbf{2.69\ A\angle -31.35°}$

c.

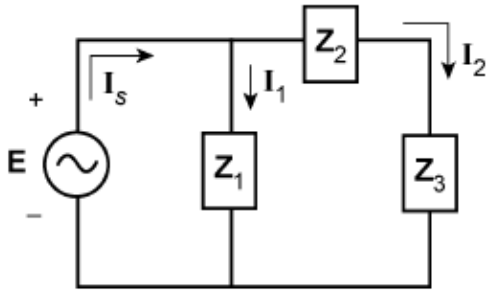

$\mathbf{Z}_1$: $R = \dfrac{V^2}{P} = \dfrac{10^4}{200} = 50\ \Omega$

$X_L, X_C = 0\ \Omega$

$\mathbf{I}_1 = \dfrac{100\text{ V}\angle 0^\circ}{50\ \Omega\angle 0^\circ} = 2\text{ A}\angle 0^\circ$

$\mathbf{I}_2 = \mathbf{I}_s - \mathbf{I}_1$

$= 2.6926\text{ A}\angle -31.35^\circ - 2\text{ A}\angle 0^\circ$

$= 2.299\text{ A} - j1.40\text{ A} - 2.0\text{ A}$

$= 0.299\text{ A} - j1.40\text{ A}$

$= 1.432\text{ A}\angle -77.94^\circ$

$\mathbf{Z}_2$: $R = \dfrac{P}{I_2^2} = \dfrac{30\text{ W}}{(1.432\text{ A})^2} = \mathbf{14.63\ \Omega}$, $X_L = \dfrac{Q}{I_2^2} = \dfrac{40\text{ VAR}}{(1.432\text{ A})^2} = \mathbf{19.50\ \Omega}$

$X_C = \mathbf{0\ \Omega}$

$\mathbf{Z}_3$: $X_L = \dfrac{Q}{I_2^2} = \dfrac{100\text{ VAR}}{(1.432\text{ A})^2} = \mathbf{48.76\ \Omega}$, $R = \mathbf{0\ \Omega}$, $X_C = \mathbf{0\ \Omega}$

15. a. $P_T = 100\text{ W} + 1000\text{ W} = \mathbf{1100\ W}$

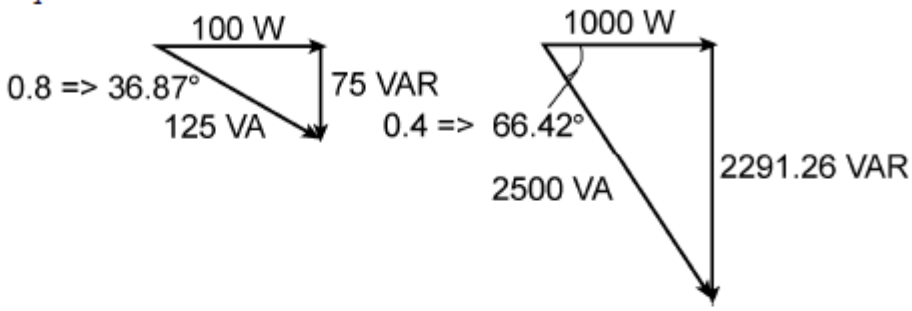

$Q_T = 75\text{ VAR}(C) + 2291.26\text{ VAR}(C) = \mathbf{2366.26\ VAR(}\boldsymbol{C}\mathbf{)}$

$S_T = \sqrt{P_T^2 + Q_T^2} = \mathbf{2609.44\ VA}$

$F_p = \dfrac{P_T}{S_T} = \dfrac{1100\text{ W}}{2609.44\text{ VA}} = \mathbf{0.422\ (leading)} \Rightarrow 65.04^\circ$

b. $S_T = EI \Rightarrow E = \dfrac{S_T}{I} = \dfrac{2609.44\text{ VA}}{5\text{ A}} = 521.89\text{ V}$

$\mathbf{E = 521.89\ V\angle -65.07^\circ}$

c.

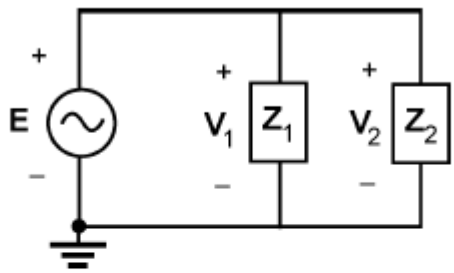

$$I_{Z_1} = \frac{S}{V_1} = \frac{S}{E} = \frac{125\text{ VA}}{521.89\text{ V}} = 0.2395\text{ A}$$

$$I_{Z_2} = \frac{S}{V_2} = \frac{S}{E} = \frac{2500\text{ VA}}{521.89\text{ V}} = 4.79\text{ A}$$

$\mathbf{Z_1}$: $$R = \frac{P}{I_{Z_1}^2} = \frac{100\text{ W}}{(0.2395)^2} = \mathbf{1743.38\ \Omega}$$

$$Q = I_{Z_1}^2 X_C \Rightarrow X_C = \frac{Q}{I_{Z_1}^2} = \frac{75\text{ VAR}}{(0.2395\text{ A})^2} = \mathbf{1307.53\ \Omega}$$

$\mathbf{Z_2}$: $$R = \frac{P}{I_{Z_1}^2 X_C} = \frac{1000\text{ W}}{(4.790\text{ A})^2} = \mathbf{43.59\ \Omega}$$

$$X_C = \frac{Q}{I_{Z_1}^2 X_C} = \frac{2291.26\text{ VAR}}{(4.790\text{ A})^2} = \mathbf{99.88\ \Omega}$$

CHAPTER 20 – SOLUTIONS

3. a. $X_L = \mathbf{2\ k\Omega}$

b. $I = \dfrac{E}{Z_{T_s}} = \dfrac{12\text{ V}}{100\ \Omega} = \mathbf{120\ mA}$

c. $V_R = IR = (120\text{ mA})(100\ \Omega) = \mathbf{12\ V} = E$
$V_L = IX_L = (120\text{ mA})(2\text{ k}\Omega) = \mathbf{240\ V}$
$V_C = IX_C = (120\text{ mA})(2\text{ k}\Omega) = \mathbf{240\ V}$
$V_L = V_C = 20\ V_R$

d. $Q_s = \dfrac{X_L}{R} = \dfrac{20000\ \Omega}{100\ \Omega} = \mathbf{20}$ (high Q)

e. $X_L = 2\pi fL,\ L = \dfrac{X_L}{2\pi f} = \dfrac{2\text{ k}\Omega}{2\pi(5\text{ kHz})} = \mathbf{63.7\ mH}$

$X_C = \dfrac{1}{2\pi fC},\ C = \dfrac{1}{2\pi fX_C} = \dfrac{1}{2\pi(5\text{ kHz})(2\text{ k}\Omega)} = \mathbf{15{,}920\ pF}$

f. $BW = \dfrac{f_s}{Q_s} = \dfrac{5\text{ kHz}}{20} = \mathbf{250\ Hz}$

g. $f_2 = f_s + \dfrac{BW}{2} = 5\text{ kHz} + \dfrac{0.25\text{ kHz}}{2} = \mathbf{5.13\ kHz}$

$f_1 = f_s - \dfrac{BW}{2} = 5\text{ kHz} - \dfrac{0.25\text{ kHz}}{2} = \mathbf{4.88\ kHz}$

8. a. $BW = 6000\text{ Hz} - 5400\text{ Hz} = \mathbf{600\ Hz}$

b. $BW = f_s/Q_s \Rightarrow f_s = Q_sBW = (9.5)(600\text{ Hz}) = \mathbf{5700\ Hz}$

c. $Q_s = \dfrac{X_L}{R} \Rightarrow X_L = X_C = Q_sR = (9.5)(2\ \Omega) = \mathbf{19\ \Omega}$

d. $L = \dfrac{X_L}{2\pi f} = \dfrac{19\ \Omega}{2\pi(5700\text{ Hz})} = \mathbf{0.53\ mH}$

$C = \dfrac{1}{2\pi fX_C} = \dfrac{1}{2\pi(5.7\text{ kHz})(19\ \Omega)} = \mathbf{1.47\ \mu F}$

9. $I_M = \dfrac{E}{R} \Rightarrow R = \dfrac{E}{I_M} = \dfrac{5\text{ V}}{500\text{ mA}} = \mathbf{10\ \Omega}$

$BW = f_s/Q_s \Rightarrow Q_s = f_s/BW = 8400\text{ Hz}/120\text{ Hz} = 70$

$Q_s = \dfrac{X_L}{R} \Rightarrow X_L = Q_sR = (70)(10\ \Omega) = \mathbf{700\ \Omega}$

$X_C = X_L = \mathbf{700\ \Omega}$

$L = \dfrac{X_L}{2\pi f} = \dfrac{700\ \Omega}{(2\pi)(8.4\text{ kHz})} = \mathbf{13.26\text{ mH}}$

$C = \dfrac{1}{2\pi f X_C} = \dfrac{1}{(2\pi)(8.4\text{ kHz})(0.7\text{ k}\Omega)} = \mathbf{27.07\text{ nF}}$

$f_2 = f_s + BW/2 = 8400\text{ Hz} + 120\text{ Hz}/2 = \mathbf{8.46\text{ kHz}}$
$f_1 = f_s - BW/2 = 8400\text{ Hz} - 60\text{ Hz} = \mathbf{8.34\text{ kHz}}$

10. $Q_s = \dfrac{X_L}{R} \Rightarrow X_L = Q_sR = 20(2\ \Omega) = \mathbf{40\ \Omega} = X_C$

$BW = \dfrac{f_s}{Q_s} \Rightarrow f_s = Q_sBW = (20)(400\text{ Hz}) = \mathbf{8\text{ kHz}}$

$L = \dfrac{X_L}{2\pi f} = \dfrac{40\ \Omega}{2\pi(8\text{ kHz})} = \mathbf{795.77\ \mu H}$

$C = \dfrac{1}{2\pi f X_C} = \dfrac{1}{2\pi(8\text{ kHz})(40\ \Omega)} = \mathbf{497.36\text{ nF}}$

$f_2 = f_s + BW/2 = 8000\text{ Hz} + 400\text{ Hz}/2 = \mathbf{8200\text{ Hz}}$
$f_1 = f_s - BW/2 = 8000\text{ Hz} - 200\text{ Hz} = \mathbf{7800\text{ Hz}}$

11. a. $f_s = \dfrac{\omega_s}{2\pi} = \dfrac{2\pi \times 10^6\text{ rad/s}}{2\pi} = \mathbf{1\text{ MHz}}$

b. $\dfrac{f_2 - f_1}{f_s} = 0.16 \Rightarrow BW = f_2 - f_1 = 0.16\, f_s = 0.16(1\text{ MHz}) = \mathbf{160\text{ kHz}}$

c. $P = \frac{V_R^2}{R} \Rightarrow R = \frac{V_R^2}{P} = \frac{(120\text{ V})^2}{20\text{ W}} = \mathbf{720\ \Omega}$

$BW = \frac{R}{2\pi L} \Rightarrow L = \frac{R}{2\pi BW} = \frac{720\ \Omega}{(6.28)(160\text{ kHz})} = \mathbf{0.716\ mH}$

$f_s = \frac{1}{2\pi\sqrt{LC}} \Rightarrow C = \frac{1}{4\pi^2 f_s^2 L} = \frac{1}{4\pi^2(10^6\text{ Hz})^2(0.716\text{ mH})} = \mathbf{35.38\ pF}$

d. $Q_\ell = \frac{X_L}{R_\ell} = 80 \Rightarrow R_P = \frac{X_L}{80} = \frac{2\pi f_s L}{80} = \frac{2\pi(10^6\text{ Hz})(0.716\text{ mH})}{80} = \mathbf{56.23\ \Omega}$

12. a. $Q_\ell = \frac{X_L}{R_\ell}$

$R_\ell = \frac{X_L}{Q_\ell} = \frac{2\pi fL}{Q_\ell} = \frac{2\pi(1\text{MHz})(100\ \mu\text{H})}{12.5} = 50.27\ \Omega$

$\frac{f_2 - f_1}{f_s} = \frac{1}{Q_s} = 0.2$

$Q_s = \frac{1}{0.2} = 5 = \frac{X_L}{R} = \frac{2\pi fL}{R} = \frac{2\pi(1\text{ MHz})(100\ \mu\text{H})}{R} = \frac{628.32\ \Omega}{R}$

$R = \frac{628.32\ \Omega}{5} = 125.66$

$R = R_d + R_\ell$

$125.66\ \Omega = R_d + 50.27\ \Omega$

and $R_d = 125.66\ \Omega - 50.27\ \Omega = \mathbf{75.39\ \Omega}$

c. $X_C = \frac{1}{2\pi fC} = X_L$

$C = \frac{1}{2\pi f X_C} = \frac{1}{2\pi(1\text{ MHz})(628.32\ \Omega)} = \mathbf{253.3\ pF}$